COMPANY-SPECIFIC SYMBOL

ZMV43

PRODUCT NAME

Mixing valve, 4-ways

MAIN PHOTO



PRODUCT FEATURES

- Torque required [Nm]: < 1
- Body material/assembly material: brass CW617N
- Media: 50% glycol
- Maximum working pressure [bar]: 10
- Maximum operating temperature [°C]: 100
- Minimum operating temperature [°C]: -10
- Barcode: bar code packaging for retail sale
- Unit packaging method: box

TECHNICAL DRAWING

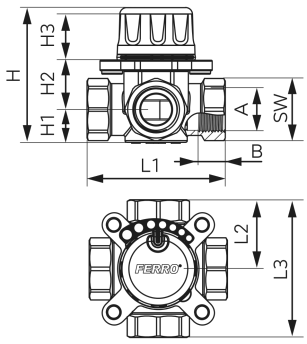

SPECIFICATION

- 3_DN: 32
- 3_A: Rp 1 1/4
- B [mm]: 21
- Connection: Rp 1 1/4
- 1_H [mm]: 78
- 1_H1 [mm]: 23
- 1_H2 [mm]: 32,5
- 1_H3 [mm]: 28
- 1_L1 [mm]: 90
- 1_L2 [mm]: 45
- 1_L3 [mm]: 90
- 1_SW [mm]: 49
- 3_Kvs [m3/h]: 17,1