COMPANY-SPECIFIC SYMBOL

Z39

COLLECTION

STANDARD

PRODUCT NAME

Wall-mounted water valve, swivel spout 170 mm

COLOUR (FINISH)

chrome

MAIN PHOTO



PRODUCT FEATURES

- Style: retro
- Mixer type: single-holder
- Controlling element: slider head
- Spout colour: chrome
- Product maintenance: Follow the instructions
- No. of assembly holes: 1
- Body material/assembly material: brass
- Assembly: wall-mounted
- Unit packaging method: box
- Water temperature [°C] max.: 90
- Coating type: shine
- Aerator dimension: M22 x 1
- Spout outreach [mm]: 215
- Acoustic group: N
- Flow class: S
- Spout type: swivel

TECHNICAL DRAWING

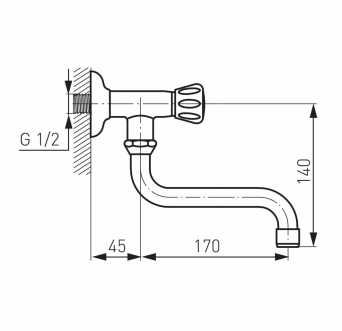

FERRO SA
ul. Przemysłowa 7
32-050 Skawina
T: +48 12 25 62 100

NIP 944 20 51 648
KRS 0000289768
REGON 356375388