COMPANY-SPECIFIC SYMBOL

Z240

PRODUCT NAME	COLOUR (FINISH)
Poppet type angle valve 1/2" x 3/8" M-M, with 10 mm copper pipe connector	chrome

MAIN PHOTO



ICONS



PRODUCT FEATURES

- Dimension A: G1/2
- Wymiar B: G3/8
- Wymiar C: 81.5
- Connection: 1/2" x 3/8"
- Connection type: screw in
- Type of holder: knob
- Media: water
- Nominal pressure [bar]: 10
- Rosette included: yes
- Barcode: bar code packaging for retail sale

TECHNICAL DRAWING

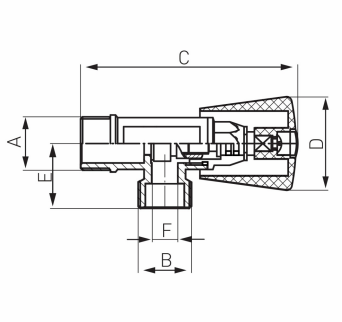

FERRO SA
ul. Przemysłowa 7
32-050 Skawina
T: +48 12 25 62 100

NIP 944 20 51 648
KRS 0000289768
REGON 356375388