COMPANY-SPECIFIC SYMBOL

Z201

COLLECTION

PRESSTIGE

PRODUCT NAME

Automatic shut-off washbasin mixer with flow controller

COLOUR (FINISH)

chrome

MAIN PHOTO



PRODUCT FEATURES

- Type of spray regulator: aerator Cache M18,5x1
- Body material/assembly material: brass
- Type and diameter of connections: water installation connection: 1 x 1/2" male thread
- Mixer height [mm]: 117
- Acoustic group: N
- Flow class: A
- Water temperature [°C] max.: 90

TECHNICAL DRAWING

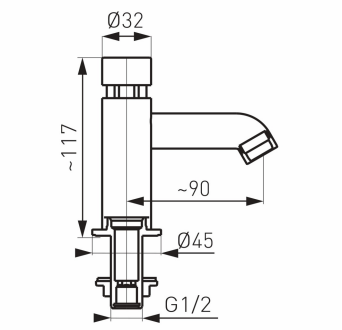

FERRO SA
ul. Przemysłowa 7
32-050 Skawina
T: +48 12 25 62 100

NIP 944 20 51 648
KRS 0000289768
REGON 356375388