COMPANY-SPECIFIC SYMBOL

Z1238C

PRODUCT NAME

Angle valve with cermamic head 1/2" x 3/8" M-M

COLOUR (FINISH)

chrome

MAIN PHOTO



ICONS



PRODUCT FEATURES

- Connection type: screw in
- Type of holder: knob
- Media: water
- Nominal pressure [bar]: 10
- Rosette included: yes
- Barcode: bar code packaging for retail sale

TECHNICAL DRAWING

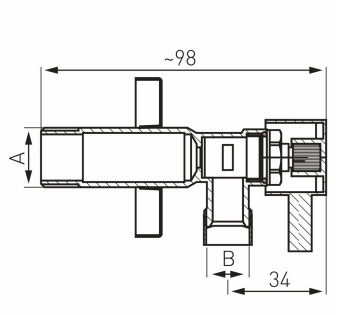

SPECIFICATION

- Dimension A: G1/2
- Dimension B: G3/8
- Dimension C: 98
- Connection: 1/2" x 3/8"

FERRO SA
ul. Przemysłowa 7
32-050 Skawina
T: +48 12 25 62 100

NIP 944 20 51 648
KRS 0000289768
REGON 356375388