COMPANY-SPECIFIC SYMBOL

XR77

COLLECTION

RETRO

PRODUCT NAME

Wall-mounted shower mixer with spot shower

COLOUR (FINISH)

chrome

MAIN PHOTO



PRODUCT FEATURES

- Controlling element: slider head
- Body material/assembly material: brass
- Shower set included: yes
- Spray handle material: ABS
- Type and diameter of connections: connectors G1/2
- Connection spacing [mm]: 150 ± 20
- Acoustic group: II
- Flow class: S
- Water temperature [°C] max.: 90

TECHNICAL DRAWING

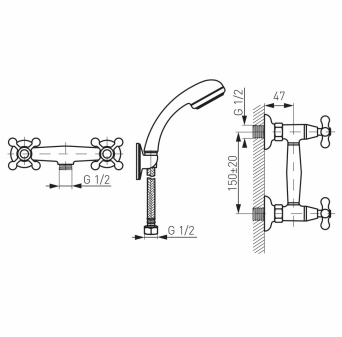

FERRO SA
ul. Przemysłowa 7
32-050 Skawina
T: +48 12 25 62 100

NIP 944 20 51 648
KRS 0000289768
REGON 356375388