COMPANY-SPECIFIC SYMBOL

XR11

COLLECTION

RETRO

PRODUCT NAME

Wall-mounted bath mixer with spot shower set

COLOUR (FINISH)

chrome

MAIN PHOTO



PRODUCT FEATURES

- Controlling element: slider head
- Type of spray regulator: aerator M22x1
- Switch type: 2 - functional
- Body material/assembly material: brass
- Shower set included: yes
- Type and diameter of connections: connectors G1/2
- Connection spacing [mm]: 150 ± 20
- Spout outreach [mm]: 147
- Acoustic group: II/II
- Flow class: S/S
- Water temperature [°C] max.: 90

TECHNICAL DRAWING

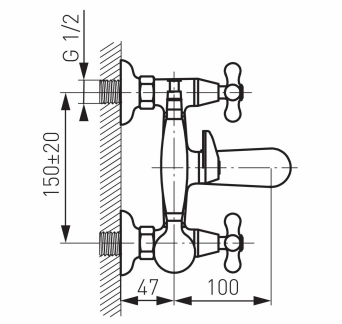

FERRO SA
ul. Przemysłowa 7
32-050 Skawina
T: +48 12 25 62 100

NIP 944 20 51 648
KRS 0000289768
REGON 356375388