COMPANY-SPECIFIC SYMBOL

XD6

COLLECTION

RETRO NEW

PRODUCT NAME

Standing bidet mixer, pop-up waste

COLOUR (FINISH)

chrome

MAIN PHOTO



PRODUCT FEATURES

- Controlling element: ceramic head
- Type of spray regulator: aerator M24x1
- Body material/assembly material: brass
- Type of drain valve: automatic G5/4
- Type and diameter of connections: flexible connection G3/8 - M10x1
- Spout outreach [mm]: 110
- Acoustic group: II
- Flow class: A
- Water temperature [°C] max.: 90

TECHNICAL DRAWING

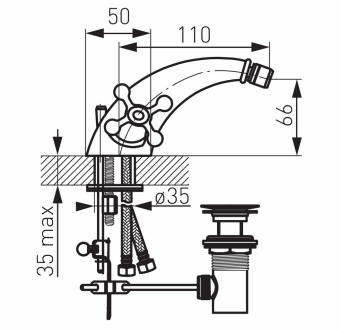

FERRO SA
ul. Przemysłowa 7
32-050 Skawina
T: +48 12 25 62 100

NIP 944 20 51 648
KRS 0000289768
REGON 356375388