COMPANY-SPECIFIC SYMBOL

U300

COLLECTION

SOLE

PRODUCT NAME

3-functions spot shower set

COLOUR (FINISH)

chrome

MAIN PHOTO



ICONS



PRODUCT FEATURES

- Spray handle material: ABS
- Number of hand shower stream functions: 3
- Spray type: rain, massage, mixed
- Shower hose length [mm]: 1500
- Easy Clean System: yes
- Flow class: Z
- Hand shower length [mm]: 214
- Water temperature [°C] max.: 70

TECHNICAL DRAWING

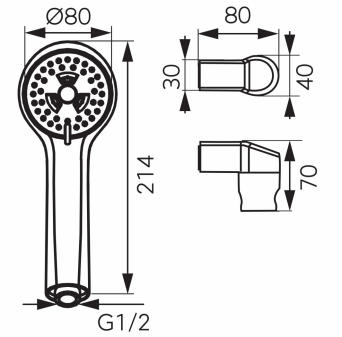

FERRO SA
ul. Przemysłowa 7
32-050 Skawina
T: +48 12 25 62 100

NIP 944 20 51 648
KRS 0000289768
REGON 356375388