COMPANY-SPECIFIC SYMBOL

S283

COLLECTION

CLICK

PRODUCT NAME

Click-clack drain valve, with overflow, G5/4

COLOUR (FINISH)

chrome

MAIN PHOTO



PRODUCT FEATURES

- Body material/assembly material: metal
- Assembly: for washbasins with overflow
- Connection type: G1¼

TECHNICAL DRAWING

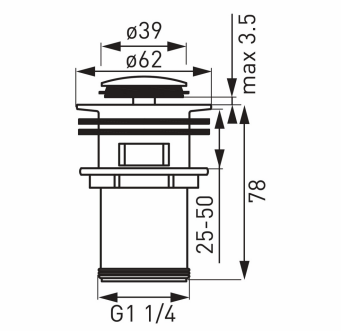

FERRO SA
ul. Przemysłowa 7
32-050 Skawina
T: +48 12 25 62 100

NIP 944 20 51 648
KRS 0000289768
REGON 356375388