COMPANY-SPECIFIC SYMBOL

S282NC

COLLECTION

ROTONDO

PRODUCT NAME

Bottle siphon, G5/4 x 32 mm

COLOUR (FINISH)

nickel

MAIN PHOTO

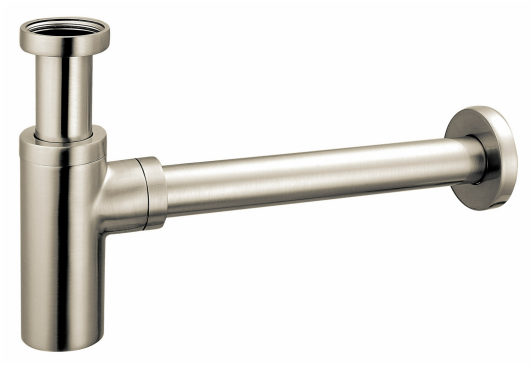

PRODUCT FEATURES

- Length [mm]: 330
- Additional accessories included: rosette
- Connection type: G1¼×32

TECHNICAL DRAWING

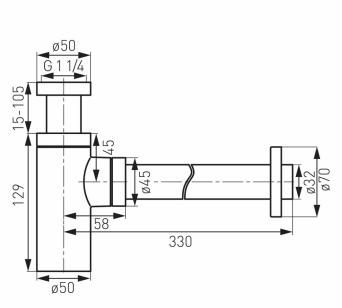

FERRO SA
ul. Przemysłowa 7
32-050 Skawina
T: +48 12 25 62 100

NIP 944 20 51 648
KRS 0000289768
REGON 356375388