COMPANY-SPECIFIC SYMBOL

S170-B

COLLECTION

SINUS

PRODUCT NAME

1-function hand shower

COLOUR (FINISH)

chrome

MAIN PHOTO



ICONS

PRODUCT FEATURES

- Spray handle material: ABS
- Number of hand shower stream functions: 1
- Spray type: rain
- Water saving system: yes
- Easy Clean System: yes
- Hand shower dimensions [mm]: 68x88
- Hand shower length [mm]: 240
- Flow class: ZZ
- Water temperature [°C] max.: 70

TECHNICAL DRAWING

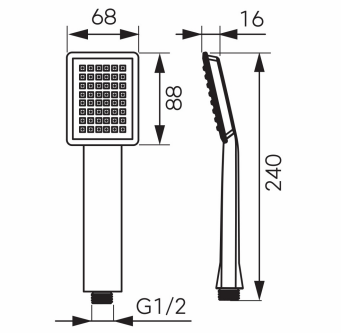

FERRO SA
ul. Przemysłowa 7
32-050 Skawina
T: +48 12 25 62 100

NIP 944 20 51 648
KRS 0000289768
REGON 356375388