COMPANY-SPECIFIC SYMBOL

NP78-BAG13U

COLLECTION

ALGEO

PRODUCT NAME

NP78 shower set with wall-mounted BAG13U bath mixer

COLOUR (FINISH)

chrome

MAIN PHOTO



ICONS



PRODUCT FEATURES

- Controlling element (of a mixer): ceramic regulator
- Rainfall shower head material: ABS plastic
- Rainfall head dimensions [mm]: 200
- Shower arm length [mm]: 340
- Rainfall bar height [mm]: 1076-1700
- Spray handle material: ABS
- Number of hand shower stream functions: 3
- Spray type: rain, massage, mixed
- Material of spray hose: metal braided
- Shower hose length [mm]: 1500
- Easy Clean System: yes
- Adjustable shower position: yes
- Adjustable height of the shower bar: yes
- Adjustable spacing between rainfall and wall: yes
- Type and diameter of connections: connectors G1/2
- Spacing of bar mountings [mm]: 998
- Flow class: S/Z/Z
- Hand shower length [mm]: 250
- Water temperature [°C] max.: 70

TECHNICAL DRAWING

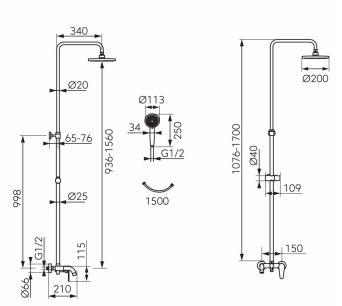

FERRO SA
ul. Przemysłowa 7
32-050 Skawina
T: +48 12 25 62 100

NIP 944 20 51 648
KRS 0000289768
REGON 356375388