COMPANY-SPECIFIC SYMBOL

NP75-TRV7U-BL

COLLECTION

TREVI BLACK

PRODUCT NAME

Rainfall shower system with thermostatic mixer

COLOUR (FINISH)

black

MAIN PHOTO



ICONS



PRODUCT FEATURES

- Controlling element (of a mixer): thermostatic head
- Rainfall shower head material: metal
- Rainfall head dimensions [mm]: 300
- Shower arm length [mm]: 425
- Rainfall bar height [mm]: 820-1265
- Spray handle material: ABS
- Number of hand shower stream functions: 3
- Spray type: rain, massage, mixed
- Material of spray hose: PVC
- Shower hose length [mm]: 1500
- Easy Clean System: yes
- Adjustable shower position: yes
- Adjustable height of the shower bar: yes
- Adjustable wall mounting height: yes
- Type and diameter of connections: connectors G1/2
- Spacing of bar mountings [mm]: 820-1265
- Hand shower length [mm]: 230
- Water temperature [°C] max.: 70

TECHNICAL DRAWING

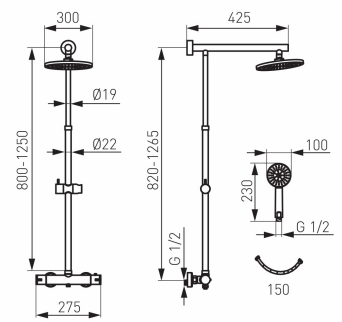

FERRO SA
ul. Przemysłowa 7
32-050 Skawina
T: +48 12 25 62 100

NIP 944 20 51 648
KRS 0000289768
REGON 356375388