COMPANY-SPECIFIC SYMBOL

NP21

COLLECTION

RONDO

PRODUCT NAME

Shower set with rainfall shower head

COLOUR (FINISH)

chrome

MAIN PHOTO



ICONS

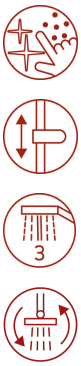

PRODUCT FEATURES

- Rainfall shower head material: ABS plastic
- Rainfall head dimensions [mm]: 200
- Shower arm length [mm]: 247
- Rainfall bar height [mm]: 1060
- Spray handle material: ABS
- Number of hand shower stream functions: 3
- Spray type: rain
- Material of spray hose: metal braided
- Shower hose length [mm]: 1500
- Easy Clean System: yes
- Adjustable shower position: yes
- Adjustable wall mounting height: yes
- Spacing of bar mountings [mm]: 550-850
- Flow class: A/Z
- Hand shower length [mm]: 240
- Water temperature [°C] max.: 70

TECHNICAL DRAWING

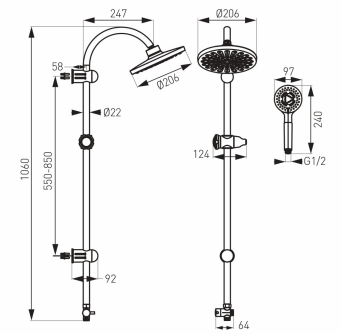

FERRO SA
ul. Przemysłowa 7
32-050 Skawina
T: +48 12 25 62 100

NIP 944 20 51 648
KRS 0000289768
REGON 356375388