COMPANY-SPECIFIC SYMBOL

N160BR

COLLECTION

RETRO

PRODUCT NAME

RETRO 1-function shower set, old bronze

COLOUR (FINISH)

old bronze

MAIN PHOTO



ICONS

PRODUCT FEATURES

- Spray handle material: ABS
- Number of hand shower stream functions: 1
- Spray type: rain
- Shower hose length [mm]: 1500
- Easy Clean System: yes
- Adjustable shower position: yes
- Spacing of bar mountings [mm]: 745
- Shower bar height [mm]: 780
- Flow class: A
- Hand shower length [mm]: 215
- Water temperature [°C] max.: 70
- Width [mm]: 100

TECHNICAL DRAWING

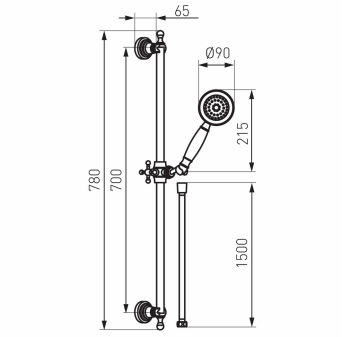

SPECIFICATION

- Height [mm]: 780
- Depth [mm]: 65