COMPANY-SPECIFIC SYMBOL

KSH3

COLLECTION

HERKULES

PRODUCT NAME

Ball valve with union, butterfly handle, 1" M-F

MAIN PHOTO



PRODUCT FEATURES

- Connection type: screw in/screw out with screw handle
- Full bore: yes
- Gland: yes
- Type of holder: butterfly
- Body material/assembly material: brass
- Ball valve ball material : brass
- Ball sealing material : PTFE
- Material of stem seal: PTFE
- Media: compressed air, 50% glycol, water
- NICKEL FREE: yes
- Nominal pressure [bar]: 40
- Maximum operating temperature [°C]: 140
- Barcode: *W in packaging with a bar code for retail sale *E product on Euro hanger with bar code for retail sale
- Maximum operating pressure [bar]: 40

TECHNICAL DRAWING

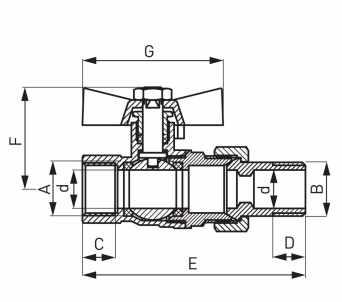

SPECIFICATION

- 3_DN: 25
- Dimension A: Rp 1
- Dimension d: 25
- Dimension B: R 1
- Dimension C: 16.8
- Dimension D: 17
- Dimension E: 115
- Dimension F: 51
- Dimension G: 72
- Connection: 1"