COMPANY-SPECIFIC SYMBOL

KNPEX16

COLLECTION

F-COMFORT

PRODUCT NAME

Ball valve for 16x2 multilayer pipes, red butterfly handle, 1/2" M

MAIN PHOTO



PRODUCT FEATURES

- Connection type: screw in
- Additional connection seal: EPDM o-ring
- For multi-layer pipes: yes
- Type of holder: butterfly
- Body material/assembly material: brass
- Ball valve ball material : brass
- Ball sealing material : PTFE
- Material of stem seal: PTFE
- Media: water
- NICKEL FREE: yes
- Nominal pressure [bar]: 10
- Maximum operating temperature [°C]: 100
- Barcode: bar code packaging for retail sale

TECHNICAL DRAWING

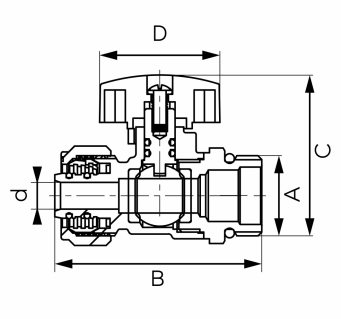

SPECIFICATION

- 3_DN: 15
- Dimension A: G1/2
- Dimension d: 7
- Dimension B: 54.2
- Dimension C: 31.6
- Dimension D: 31.5
- Connection: 1/2"
- 3_Kvs [m3/h]: 2.5
- Valve lever color: red