COMPANY-SPECIFIC SYMBOL

KMH2E

COLLECTION

HERKULES

PRODUCT NAME

Ball valve, butterfly handle, 3/4" F-F

MAIN PHOTO



PRODUCT FEATURES

- Connection type: screw out-screw out
- Full bore: yes
- Gland: yes
- Type of holder: butterfly
- Body material/assembly material: brass
- Ball valve ball material : brass
- Ball sealing material : PTFE
- Material of stem seal: PTFE
- Media: compressed air, 50% glycol, water
- NICKEL FREE: yes
- Nominal pressure [bar]: 40
- Maximum operating temperature [°C]: 140
- Barcode: *W in packaging with a bar code for retail sale *E product on Euro hanger with bar code for retail sale

TECHNICAL DRAWING

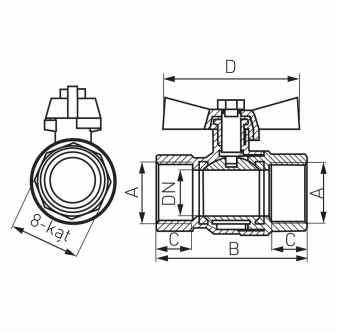

SPECIFICATION

- 3_DN: 20
- Dimension A: Rp 3/4
- Dimension B: 66
- Dimension C: 14.5
- Dimension D: 66
- Connection: 3/4"

FERRO SA
ul. Przemysłowa 7
32-050 Skawina
T: +48 12 25 62 100

NIP 944 20 51 648
KRS 0000289768
REGON 356375388