COMPANY-SPECIFIC SYMBOL

KMH11E

COLLECTION

HERKULES

PRODUCT NAME

Ball valve, butterfly handle, 1/2" M-F

MAIN PHOTO



PRODUCT FEATURES

- Connection type: screw in/screw out
- Full bore: yes
- Gland: yes
- Type of holder: butterfly
- Body material/assembly material: brass
- Ball valve ball material : brass
- Ball sealing material : PTFE
- Material of stem seal: PTFE
- Media: compressed air, 50% glycol, water
- NICKEL FREE: yes
- Nominal pressure [bar]: 40
- Maximum operating temperature [°C]: 140
- Barcode: *W in packaging with a bar code for retail sale *E product on Euro hanger with bar code for retail sale

TECHNICAL DRAWING

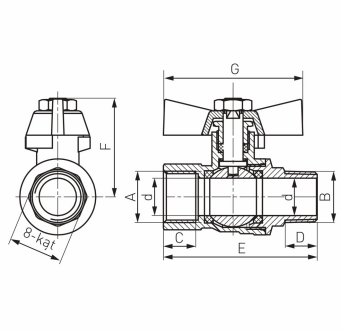

SPECIFICATION

- 3_DN: 15
- Dimension A: Rp 1/2
- Dimension d: 15
- Dimension B: R 1/2
- Dimension C: 13
- Dimension D: 13
- Dimension E: 61.5
- Dimension F: 40
- Dimension G: 56
- Connection: 1/2"