COMPANY-SPECIFIC SYMBOL

KFPZF4

COLLECTION

F-POWER

PRODUCT NAME

Ball valve with a filter, 1 1/4" F-F, F-Power

MAIN PHOTO

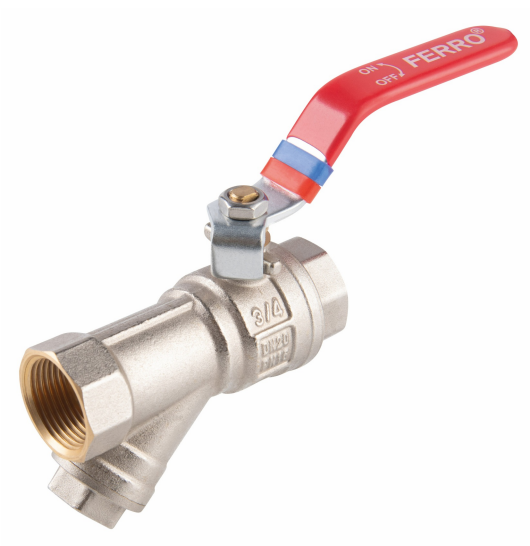

ICONS



PRODUCT FEATURES

- Connection type: screw out-screw out
- Filter type: mesh; stainless steel
- Gland: yes
- Type of holder: lever
- Body material/assembly material: brass
- Ball valve ball material : brass
- Ball sealing material : PTFE
- Material of stem seal: PTFE
- Media: water, 50% glycol, compressed air
- NICKEL FREE: yes
- Nominal pressure [bar]: 16
- Maximum operating temperature [°C]: 120
- Barcode: bar code packaging for retail sale
- Maximum operating pressure [bar]: 16

TECHNICAL DRAWING

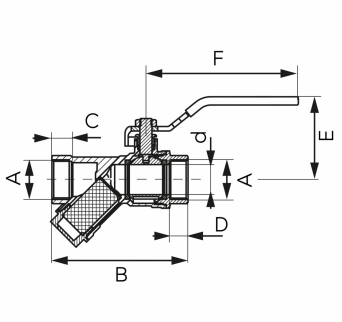

SPECIFICATION

- 3_DN: 32
- Dimension A: G1 1/4
- Dimension d: 32
- Dimension B: 137
- Dimension C: 16
- Dimension D: 15.5
- Dimension E: 70.5
- Dimension F: 116.5
- Connection: 1 1/4"
- 3_Kvs [m3/h]: 13.66

FERRO SA
ul. Przemysłowa 7
32-050 Skawina
T: +48 12 25 62 100

NIP 944 20 51 648
KRS 0000289768
REGON 356375388