COMPANY-SPECIFIC SYMBOL

KFPW6

COLLECTION

F-POWER

PRODUCT NAME

Ball valve with air vent and drainage, 2" F-F, F-Power

MAIN PHOTO

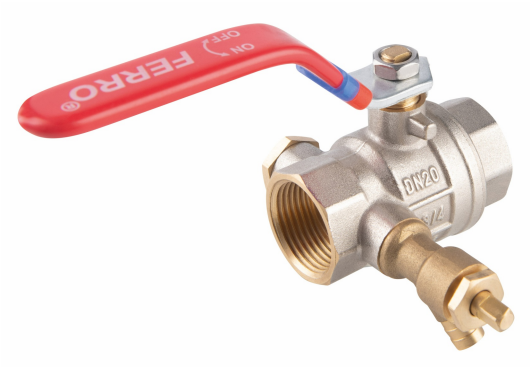

ICONS



PRODUCT FEATURES

- Connection type: screw out-screw out
- Air vent: yes
- Drain nozzle: yes
- Full bore: yes
- Gland: yes
- Type of holder: lever
- Body material/assembly material: brass
- Ball valve ball material : brass
- Ball sealing material : PTFE
- Material of stem seal: PTFE
- Media: water, 50% glycol, compressed air
- NICKEL FREE: yes
- Nominal pressure [bar]: 16
- Maximum operating temperature [°C]: 120
- Minimum operating temperature [°C]: -30
- Barcode: bar code packaging for retail sale
- Maximum operating pressure [bar]: 16

TECHNICAL DRAWING

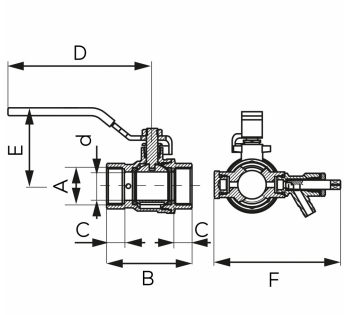

SPECIFICATION

- 3_DN: 50
- Dimension A: G2
- Dimension d: 50
- Dimension B: 107.5
- Dimension C: 17.5
- Dimension D: 151.5
- Dimension E: 90.5
- Dimension F: 123.7
- Connection: 2"

FERRO SA
ul. Przemysłowa 7
32-050 Skawina
T: +48 12 25 62 100

NIP 944 20 51 648
KRS 0000289768
REGON 356375388