COMPANY-SPECIFIC SYMBOL

KFPOM1

COLLECTION

F-POWER

PRODUCT NAME

Ball valve with drain, lever handle, 1/2" F-F, F-Power

MAIN PHOTO

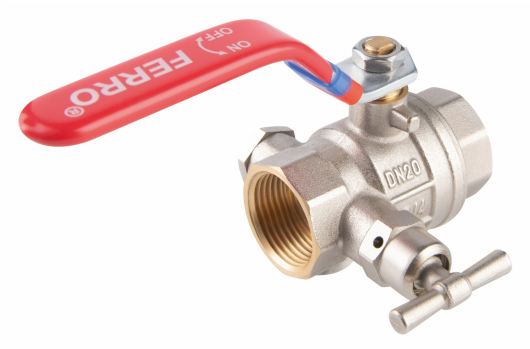


ICONS




PRODUCT FEATURES

- Connection type: screw out-screw out
- Air vent: yes
- Full bore: yes
- Gland: yes
- Type of holder: lever
- Body material/assembly material: brass
- Ball valve ball material : brass
- Ball sealing material : PTFE
- Material of stem seal: PTFE
- Media: water, 50% glycol, compressed air
- NICKEL FREE: yes
- Nominal pressure [bar]: 16
- Maximum operating temperature [°C]: 120
- Barcode: bar code packaging for retail sale
- Maximum operating pressure [bar]: 16
- Width [mm]: 122

TECHNICAL DRAWING

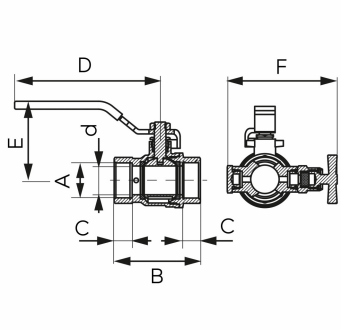


SPECIFICATION

- 3_DN: 15
- Dimension A: G1/2
- Dimension d: 15
- Dimension B: 54
- Dimension C: 12
- Dimension D: 96
- Dimension E: 48.5
- Dimension F: 71.3
- Connection: 1/2"
- 3_Kvs [m3/h]: 7.51
- Height [mm]: 65
- Depth [mm]: 72