COMPANY-SPECIFIC SYMBOL

KFPO2

COLLECTION

F-POWER

PRODUCT NAME

Ball valve with drain, lever handle, 3/4" F-F, F-Power

MAIN PHOTO

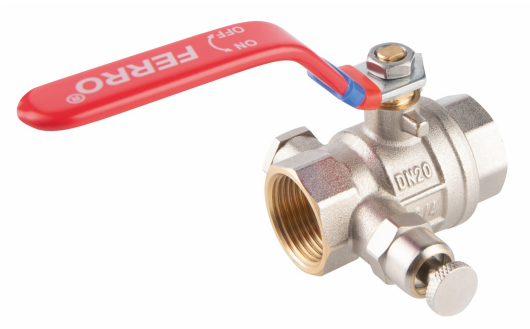

ICONS



PRODUCT FEATURES

- Connection type: screw out-screw out
- Air vent: yes
- Full bore: yes
- Gland: yes
- Type of holder: lever
- Body material/assembly material: brass
- Ball valve ball material : brass
- Ball sealing material : PTFE
- Material of stem seal: PTFE
- Media: water, 50% glycol, compressed air
- NICKEL FREE: yes
- Nominal pressure [bar]: 16
- Maximum operating temperature [°C]: 120
- Barcode: bar code packaging for retail sale
- Maximum operating pressure [bar]: 16

TECHNICAL DRAWING

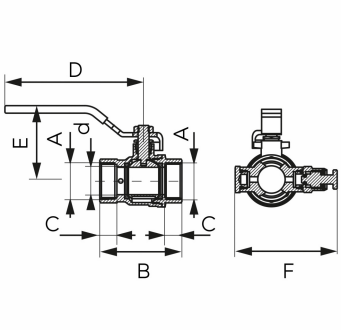

SPECIFICATION

- 3_DN: 20
- Dimension A: G3/4
- Dimension d: 20
- Dimension B: 60
- Dimension C: 12.5
- Dimension D: 101.5
- Dimension E: 55
- Dimension F: 74.5
- Connection: 3/4"
- 3_Kvs [m3/h]: 15.48