COMPANY-SPECIFIC SYMBOL

KFPM31

COLLECTION

F-POWER

PRODUCT NAME

Ball valve, butterfly handle, 1" M-F, F-Power

MAIN PHOTO




ICONS




PRODUCT FEATURES

- Connection type: screw in/screw out
- Full bore: yes
- Gland: yes
- Type of holder: butterfly
- Body material/assembly material: brass
- Ball valve ball material : brass
- Ball sealing material : PTFE
- Material of stem seal: PTFE
- Media: water, 50% glycol, compressed air
- NICKEL FREE: yes
- Nominal pressure [bar]: 30
- Maximum operating temperature [°C]: 120
- Minimum operating temperature [°C]: -30
- Barcode: bar code packaging for retail sale
- Maximum operating pressure [bar]: 30
- Width [mm]: 76

TECHNICAL DRAWING

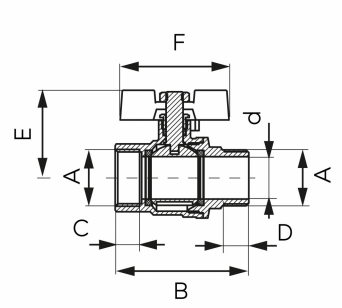


SPECIFICATION

- 3_DN: 25
- Dimension A: G1
- Dimension d: 25
- Dimension B: 75.5
- Dimension C: 13
- Dimension D: 13.5
- Dimension E: 47.4
- Connection: 1"
- 3_Kvs [m3/h]: 23.11
- Height [mm]: 69
- Depth [mm]: 45