COMPANY-SPECIFIC SYMBOL

KFP61

COLLECTION

F-POWER

PRODUCT NAME

Ball valve, lever handle, 2" M-F, F-Power

MAIN PHOTO

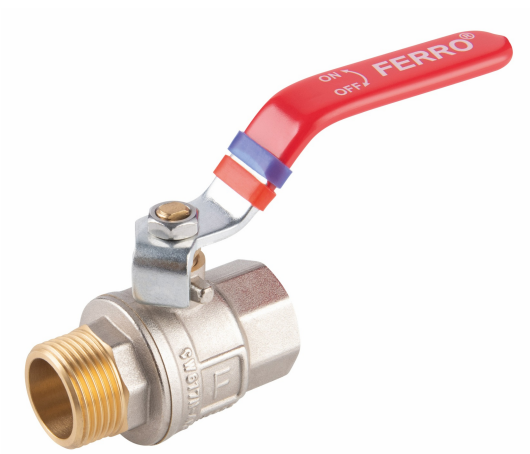

ICONS



PRODUCT FEATURES

- Connection type: screw in/screw out
- Full bore: yes
- Gland: yes
- Type of holder: lever
- Body material/assembly material: brass
- Ball valve ball material : brass
- Ball sealing material : PTFE
- Material of stem seal: PTFE
- Media: water, 50% glycol, compressed air
- NICKEL FREE: yes
- Nominal pressure [bar]: 30
- Maximum operating temperature [°C]: 120
- Minimum operating temperature [°C]: -30
- Barcode: bar code packaging for retail sale
- Maximum operating pressure [bar]: 30

TECHNICAL DRAWING

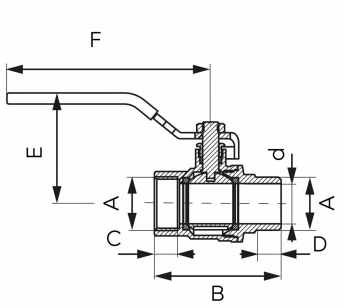

SPECIFICATION

- 3_DN: 50
- Dimension A: G2
- Dimension d: 50
- Dimension B: 120.5
- Dimension C: 16
- Dimension D: 20.5
- Dimension E: 90.5
- Connection: 2"
- 3_Kvs [m3/h]: -