COMPANY-SPECIFIC SYMBOL

KFP41

COLLECTION

F-POWER

PRODUCT NAME

Ball valve, lever handle, 1 1/4" M-F, F-Power

MAIN PHOTO

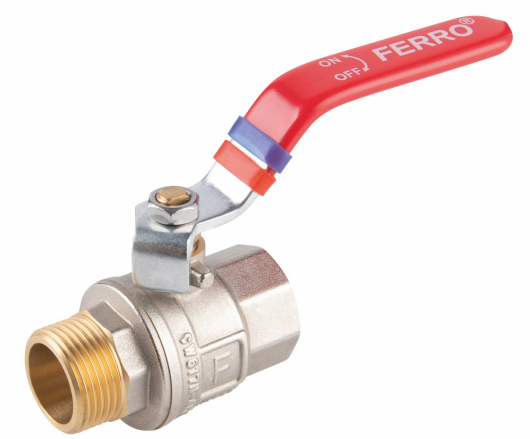

ICONS



PRODUCT FEATURES

- Connection type: screw in/screw out
- Full bore: yes
- Gland: yes
- Type of holder: lever
- Body material/assembly material: brass
- Ball valve ball material : brass
- Ball sealing material : PTFE
- Material of stem seal: PTFE
- Media: water, 50% glycol, compressed air
- NICKEL FREE: yes
- Nominal pressure [bar]: 30
- Maximum operating temperature [°C]: 120
- Minimum operating temperature [°C]: -30
- Barcode: bar code packaging for retail sale
- Maximum operating pressure [bar]: 30

TECHNICAL DRAWING

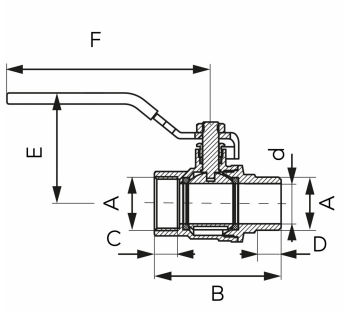

SPECIFICATION

- 3_DN: 32
- Dimension A: G1 1/4
- Dimension d: 32
- Dimension B: 93
- Dimension C: 14
- Dimension D: 18.5
- Dimension E: 70.5
- Connection: 1 1/4"
- 3_Kvs [m3/h]: 42.01