COMPANY-SPECIFIC SYMBOL

KFC51

COLLECTION

F-COMFORT

PRODUCT NAME

Ball valve, lever handle, 1 1/2" M-F, F-Comfort

MAIN PHOTO

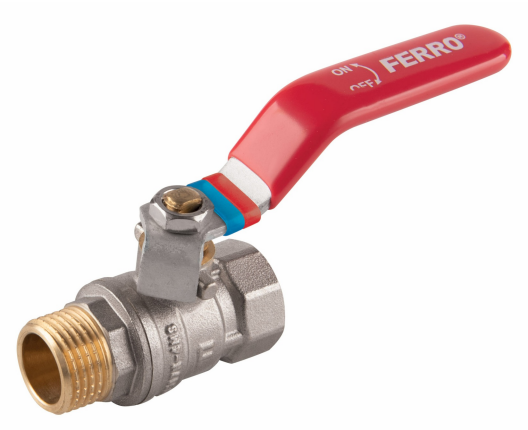

PRODUCT FEATURES

- Connection type: screw in/screw out
- Gland: yes
- Type of holder: lever
- Body material/assembly material: brass
- Ball valve ball material : brass
- Ball sealing material : PTFE
- Material of stem seal: PTFE
- Media: water
- NICKEL FREE: yes
- Nominal pressure [bar]: 20
- Maximum operating temperature [°C]: 100
- Barcode: bar code packaging for retail sale
- Maximum operating pressure [bar]: 20

TECHNICAL DRAWING

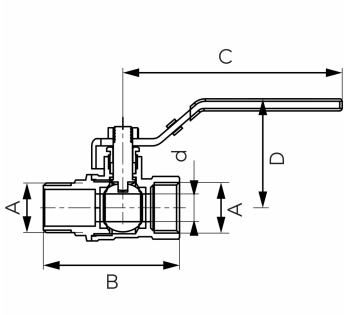

SPECIFICATION

- 3_DN: 40
- Dimension A: G1 1/2
- Dimension d: 33
- Dimension B: 93
- Dimension C: 154
- Dimension D: 79
- Connection: 1 1/2"
- 3_Kvs [m3/h]: 54.77

FERRO SA
ul. Przemysłowa 7
32-050 Skawina
T: +48 12 25 62 100

NIP 944 20 51 648
KRS 0000289768
REGON 356375388