COMPANY-SPECIFIC SYMBOL

KCD2

COLLECTION

F-COMFORT

PRODUCT NAME

Ball bibcock with two outlets lever handle 3/4" M, F-Comfort

MAIN PHOTO



PRODUCT FEATURES

- Connection type: screw in
- Gland: yes
- Type of holder: lever
- Body material/assembly material: brass
- Ball valve ball material : brass
- Ball sealing material : PTFE
- Material of stem seal: PTFE
- Media: water
- NICKEL FREE: yes
- Nominal pressure [bar]: 10
- Maximum operating temperature [°C]: 65
- Barcode: bar code packaging for retail sale
- Width [mm]: 55

TECHNICAL DRAWING

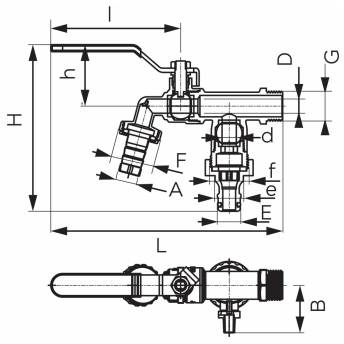

SPECIFICATION

- 3_DN: 20
- Dimension A: 19.5
- Dimension d: 10
- Dimension B: 33
- Dimension D: 10
- Dimension E: 15.5
- Dimension F: G1
- Dimension G: G3/4
- Dimension H: 118
- Connection: 3/4"
- Dimension L: 164
- Dimension e: 19.8
- Dimension f: G1
- Dimension h: 39.1
- Dimension I: 90
- Height [mm]: 117
- Depth [mm]: 161,5