COMPANY-SPECIFIC SYMBOL

F04M

PRODUCT NAME

Sediment filter with magnet, F-F, DN32, G1 1/4

MAIN PHOTO



PRODUCT FEATURES

- Connection type: screw out-screw out
- Filter type: diagonal mesh
- Body material/assembly material: brass CW617N - 4MS
- Media: water, 50% glycol
- NICKEL FREE: yes
- Nominal pressure [bar]: 16
- Maximum operating temperature [°C]: 100
- Barcode: bar code packaging for retail sale
- Unit packaging method: hanger
- Maximum operating pressure [bar]: 16

TECHNICAL DRAWING

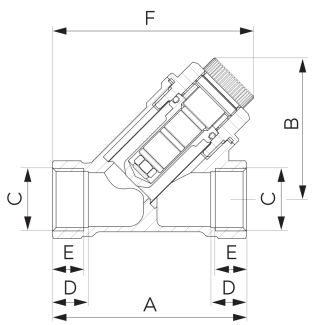

SPECIFICATION

- Connection: 1 1/4"
- Dimension A: 95
- Dimension B: 72.7
- Dimension C: G1 1/4
- Dimension D: 17.5
- Dimension E: 15.5
- Dimension F: 97.7