COMPANY-SPECIFIC SYMBOL

F03M

PRODUCT NAME

Sediment filter with magnet, F-F, DN20, G3/4

MAIN PHOTO



PRODUCT FEATURES

- Connection type: screw out-screw out
- Filter type: diagonal mesh
- Body material/assembly material: brass CW617N - 4MS
- Media: water, 50% glycol
- NICKEL FREE: yes
- Nominal pressure [bar]: 16
- Maximum operating temperature [°C]: 100
- Barcode: bar code packaging for retail sale
- Unit packaging method: hanger
- Maximum operating pressure [bar]: 16

TECHNICAL DRAWING

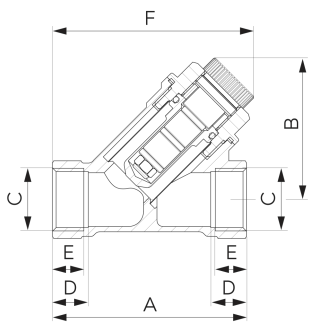

SPECIFICATION

- Connection: 3/4"
- Dimension A: 76
- Dimension B: 54.8
- Dimension C: G3/4
- Dimension D: 13.5
- Dimension E: 12
- Dimension F: 77.8

FERRO SA
ul. Przemysłowa 7
32-050 Skawina
T: +48 12 25 62 100

NIP 944 20 51 648
KRS 0000289768
REGON 356375388