COMPANY-SPECIFIC SYMBOL

DSN08

COLLECTION

SLIM

PRODUCT NAME

Square rainfall shower head 300 x 300 mm

COLOUR (FINISH)

chrome

MAIN PHOTO



ICONS



PRODUCT FEATURES

- Rainfall shower head material: stainless steel
- Rainfall head dimensions [mm]: 300x300
- Easy Clean System: yes
- Type and diameter of connections: connection G1/2
- Flow class: C
- Water temperature [°C] max.: 70

TECHNICAL DRAWING

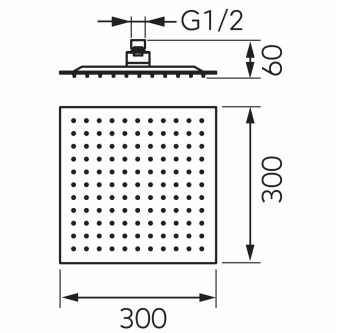

FERRO SA
ul. Przemysłowa 7
32-050 Skawina
T: +48 12 25 62 100

NIP 944 20 51 648
KRS 0000289768
REGON 356375388