COMPANY-SPECIFIC SYMBOL

DRGS2/45/75BM NOVELTY

COLLECTION

STAMPO

PRODUCT NAME

Double bowl granite sink 45/75 cm

COLOUR (FINISH)

black matt

MAIN PHOTO



PRODUCT FEATURES

- Body material/assembly material: granite composite
- Number of assembly holes: 1
- Plug included: yes
- Siphon included: yes
- With overflow: yes
- Width [mm]: 750

TECHNICAL DRAWING

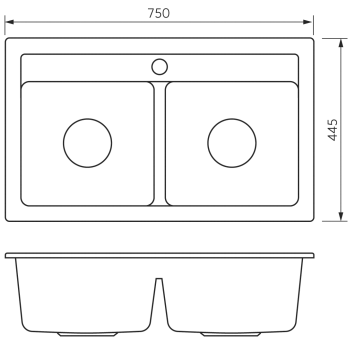

SPECIFICATION

- Depth [mm]: 200
- Height [mm]: 445

FERRO SA
ul. Przemysłowa 7
32-050 Skawina
T: +48 12 25 62 100

NIP 944 20 51 648
KRS 0000289768
REGON 356375388