COMPANY-SPECIFIC SYMBOL

DRGM1/48/58SA

COLLECTION

MEZZO II

PRODUCT NAME

MEZZO II single bowl granite sink 48/58 cm, sand

COLOUR (FINISH)

sand

MAIN PHOTO



ICONS

PRODUCT FEATURES

- Height [mm]: 176
- Body material/assembly material: granite composite
- Plug included: yes
- Plug type: automatic with knob control
- Siphon included: yes
- Siphon type: with the possibility of connecting a dishwasher drain or washing machine
- With overflow: yes
- Total length [mm]: 580
- Total width [mm]: 480
- Internal chamber length 1 [mm]: 510
- Internal chamber width 1 [mm]: 329
- Width [mm]: 580

TECHNICAL DRAWING

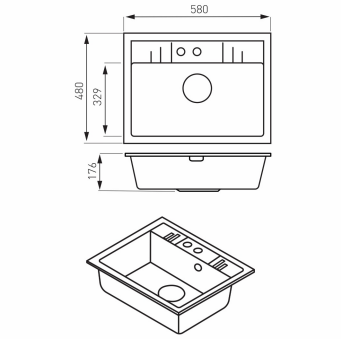

SPECIFICATION

- Depth [mm]: 480
- Height [mm]: 176

FERRO SA
ul. Przemysłowa 7
32-050 Skawina
T: +48 12 25 62 100

NIP 944 20 51 648
KRS 0000289768
REGON 356375388