COMPANY-SPECIFIC SYMBOL

BZA4WSS

COLLECTION

ZUMBA INOX

PRODUCT NAME

Standing sink mixer with a rotating flexible white spout

COLOUR (FINISH)

stainless steel

MAIN PHOTO



PRODUCT FEATURES

- Controlling element: ceramic regulator
- Type of spray regulator: aerator M22x1
- Body material/assembly material: stainless steel
- Type and diameter of connections: flexible connection G3/8 - M10x1
- Spout type: flexible, swivel
- Mixer height [mm]: 280-440
- Spout outreach [mm]: 150-350
- Acoustic group: I
- Flow class: A
- Water temperature [°C] max.: 70

TECHNICAL DRAWING

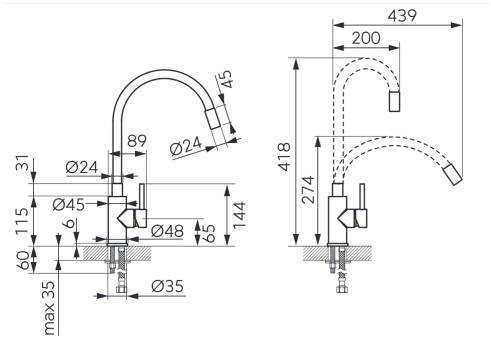

FERRO SA
ul. Przemysłowa 7
32-050 Skawina
T: +48 12 25 62 100

NIP 944 20 51 648
KRS 0000289768
REGON 356375388