COMPANY-SPECIFIC SYMBOL

BTG2VL

COLLECTION

TIGA

PRODUCT NAME

Standing washbasin mixer, click-clack drain

COLOUR (FINISH)

chrome

MAIN PHOTO



ICONS

PRODUCT FEATURES

- Controlling element: ceramic regulator
- Type of spray regulator: water-saving aerator M24x1 Easy Clean
- Body material/assembly material: brass
- Type of drain valve: click-clack G5/4
- Water saving system: yes
- Type and diameter of connections: flexible connection G3/8 - M10x1
- Mixer height [mm]: 155
- Water outlet height [mm]: 82
- Spout outreach [mm]: 114
- Acoustic group: I
- Flow class: Z
- Water temperature [°C] max.: 70

TECHNICAL DRAWING

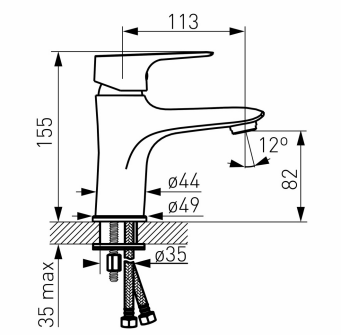

FERRO SA
ul. Przemysłowa 7
32-050 Skawina
T: +48 12 25 62 100

NIP 944 20 51 648
KRS 0000289768
REGON 356375388