COMPANY-SPECIFIC SYMBOL

BTG1VL

COLLECTION

TIGA

PRODUCT NAME

Wall-mounted bath mixer

COLOUR (FINISH)

chrome

MAIN PHOTO



ICONS

PRODUCT FEATURES

- Controlling element: ceramic regulator
- Type of spray regulator: aerator M24x1
- Switch type: ceramic
- Body material/assembly material: brass
- Water saving system: yes
- Type and diameter of connections: connectors G1/2
- Connection spacing [mm]: 150 ± 20
- Spout outreach [mm]: 178
- Acoustic group: N/N
- Flow class: A/A
- Water temperature [°C] max.: 70

TECHNICAL DRAWING

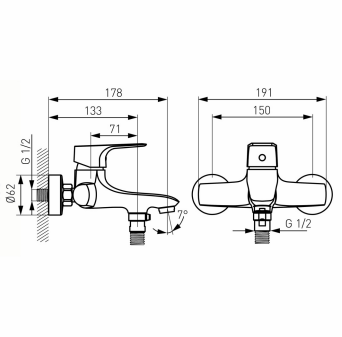

FERRO SA
ul. Przemysłowa 7
32-050 Skawina
T: +48 12 25 62 100

NIP 944 20 51 648
KRS 0000289768
REGON 356375388