COMPANY-SPECIFIC SYMBOL

BSC2BL

COLLECTION

STRATOS BLACK

PRODUCT NAME

Standing washbasin mixer

COLOUR (FINISH)

black

MAIN PHOTO



PRODUCT FEATURES

- Controlling element: ceramic regulator
- Type of spray regulator: aerator Coin Slot M24x1
- Body material/assembly material: brass
- Type of drain valve: none
- Type and diameter of connections: flexible connection G3/8 - M10x1
- Mixer height [mm]: 158
- Water outlet height [mm]: 116
- Spout outreach [mm]: 130
- Acoustic group: II
- Flow class: A
- Water temperature [°C] max.: 70

TECHNICAL DRAWING

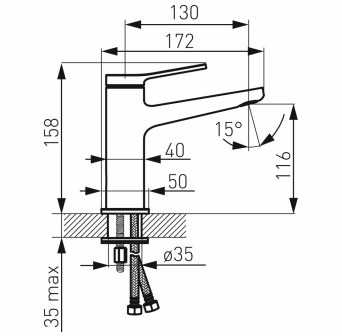

FERRO SA
ul. Przemysłowa 7
32-050 Skawina
T: +48 12 25 62 100

NIP 944 20 51 648
KRS 0000289768
REGON 356375388