COMPANY-SPECIFIC SYMBOL

BLE4B

COLLECTION

LIBRETTO

PRODUCT NAME

LIBRETTO sink mixer, flexible pull-out black spout, chrome

COLOUR (FINISH)

chrome

MAIN PHOTO



PRODUCT FEATURES

- Controlling element: ceramic regulator
- Body material/assembly material: brass
- Type and diameter of connections: flexible connection G3/8 - M8x1
- Spout type: upper with spring
- Mixer height [mm]: 500
- Acoustic group: I/I
- Flow class: Z/Z
- Water temperature [°C] max.: 70
- Width [mm]: 245

TECHNICAL DRAWING

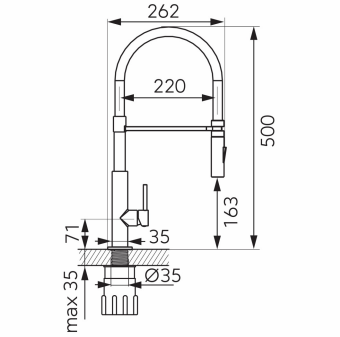

SPECIFICATION

- Height [mm]: 500
- Depth [mm]: 30

FERRO SA
ul. Przemysłowa 7
32-050 Skawina
T: +48 12 25 62 100

NIP 944 20 51 648
KRS 0000289768
REGON 356375388