COMPANY-SPECIFIC SYMBOL

BIS4A

COLLECTION

ISSO

PRODUCT NAME

Standing sink mixer, swivel spout

COLOUR (FINISH)

chrome

MAIN PHOTO



PRODUCT FEATURES

- Controlling element: ceramic regulator
- Type of spray regulator: aerator M24x1
- Body material/assembly material: brass
- Type and diameter of connections: flexible connection G3/8 - M10x1
- Spout type: swivel
- Mixer height [mm]: 150
- Water outlet height [mm]: 123
- Spout outreach [mm]: 209
- Acoustic group: II
- Flow class: A
- Water temperature [°C] max.: 70

TECHNICAL DRAWING

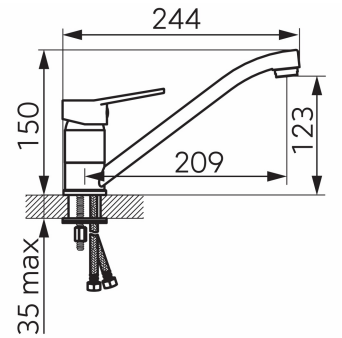

FERRO SA
ul. Przemysłowa 7
32-050 Skawina
T: +48 12 25 62 100

NIP 944 20 51 648
KRS 0000289768
REGON 356375388