COMPANY-SPECIFIC SYMBOL

BFI2L

COLLECTION

FIESTA

PRODUCT NAME

FIESTA standing countertop washbasin mixer, chrome

COLOUR (FINISH)

chrome

MAIN PHOTO



PRODUCT FEATURES

- Controlling element: ceramic regulator
- Type of spray regulator: aerator M24x1
- Body material/assembly material: brass
- Type and diameter of connections: flexible connection G3/8 - M10x1
- Mixer height [mm]: 343
- Water outlet height [mm]: 247
- Spout outreach [mm]: 186
- Acoustic group: II
- Flow class: A
- Water temperature [°C] max.: 70
- Width [mm]: 55
- Spout type: swivel

TECHNICAL DRAWING

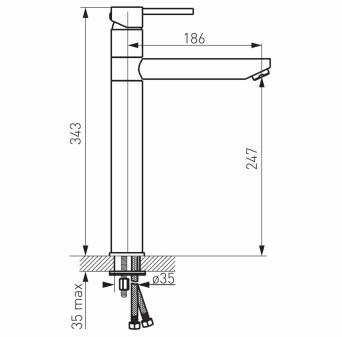

SPECIFICATION

- Height [mm]: 343
- Depth [mm]: 191

FERRO SA
ul. Przemysłowa 7
32-050 Skawina
T: +48 12 25 62 100

NIP 944 20 51 648
KRS 0000289768
REGON 356375388