COMPANY-SPECIFIC SYMBOL

BAQ7P

COLLECTION

ALGEO SQUARE

PRODUCT NAME

ALGEO SQUARE concealed shower mixer 2F, chrome

COLOUR (FINISH)

chrome

MAIN PHOTO



PRODUCT FEATURES

- Controlling element: ceramic regulator
- Switch type: 2 - functional
- Body material/assembly material: brass
- Type and diameter of connections: connection G1/2
- Acoustic group: II/II
- Flow class: B/S
- Water temperature [°C] max.: 70
- Width [mm]: 130

TECHNICAL DRAWING

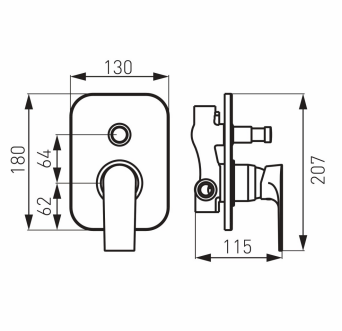

SPECIFICATION

- Height [mm]: 130
- Depth [mm]: 70

FERRO SA
ul. Przemysłowa 7
32-050 Skawina
T: +48 12 25 62 100

NIP 944 20 51 648
KRS 0000289768
REGON 356375388