COMPANY-SPECIFIC SYMBOL

BAG11P

COLLECTION

ALGEO

PRODUCT NAME

Concealed bath mixer with shower set, spout 190 mm

COLOUR (FINISH)

chrome

MAIN PHOTO



PRODUCT FEATURES

- Controlling element: ceramic regulator
- Type of spray regulator: aerator M24x1
- Switch type: ceramic
- Body material/assembly material: brass
- Rosette size [cm]: 12 x 35
- Acoustic group: II/I
- Flow class: B/A
- Hand shower length [mm]: 213
- Water temperature [°C] max.: 70

TECHNICAL DRAWING

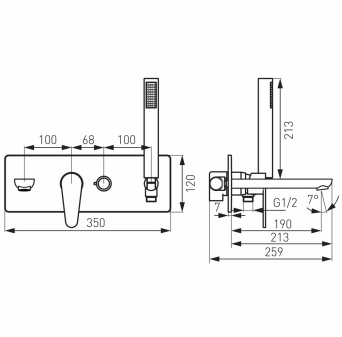

FERRO SA
ul. Przemysłowa 7
32-050 Skawina
T: +48 12 25 62 100

NIP 944 20 51 648
KRS 0000289768
REGON 356375388