COMPANY-SPECIFIC SYMBOL

ASM09

COLLECTION

SMILE BA

PRODUCT NAME

SMILE towel rail single 600 mm, chrome

COLOUR (FINISH)

polished stainless steel

MAIN PHOTO



PRODUCT FEATURES

- Holder type: single
- Body material/assembly material: metal
- Length [mm]: 600
- Width [mm]: 627
- Height [mm]: 26.5

TECHNICAL DRAWING

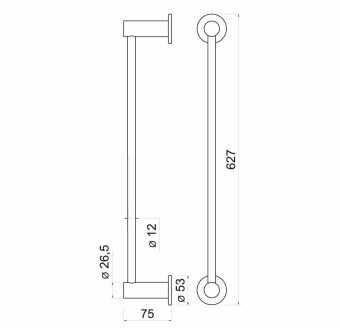

SPECIFICATION

- Height [mm]: 53
- Depth [mm]: 75