COMPANY-SPECIFIC SYMBOL

ASM06

COLLECTION

SMILE BA

PRODUCT NAME

SMILE double hook, chrome

COLOUR (FINISH)

polished stainless steel

MAIN PHOTO

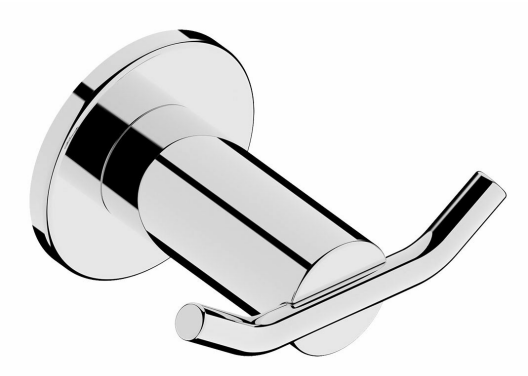

PRODUCT FEATURES

- Holder type: double
- Body material/assembly material: metal
- Length [mm]: 65
- Width [mm]: 83
- Height [mm]: 53

TECHNICAL DRAWING

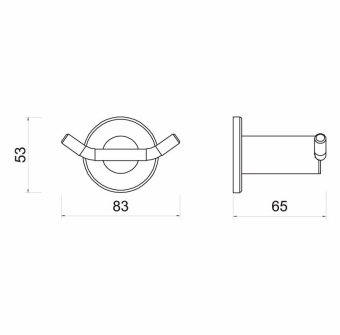

SPECIFICATION

- Height [mm]: 53
- Depth [mm]: 65

FERRO SA
ul. Przemysłowa 7
32-050 Skawina
T: +48 12 25 62 100

NIP 944 20 51 648
KRS 0000289768
REGON 356375388