COMPANY-SPECIFIC SYMBOL

AGR33BL

COLLECTION

GRETA BLACK

PRODUCT NAME

GRETA toilet paper holder, black matt

COLOUR (FINISH)

black matt

MAIN PHOTO



PRODUCT FEATURES

- Type of toilet paper holder: single
- Body material/assembly material: metal
- Length [mm]: 132
- Width [mm]: 132
- Height [mm]: 83.5

TECHNICAL DRAWING

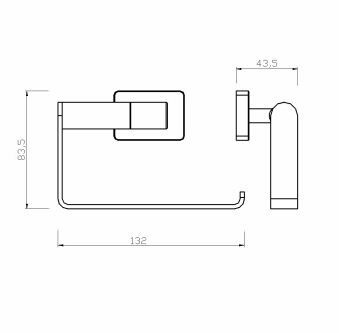

SPECIFICATION

- Height [mm]: 84
- Depth [mm]: 44