COMPANY-SPECIFIC SYMBOL

AGR14BL

COLLECTION

GRETA BLACK

PRODUCT NAME

GRETA toilet brush, black matt

COLOUR (FINISH)

black matt

MAIN PHOTO



PRODUCT FEATURES

- Body material/assembly material: metal
- Length [mm]: 117
- Width [mm]: 85
- Height [mm]: 374

TECHNICAL DRAWING

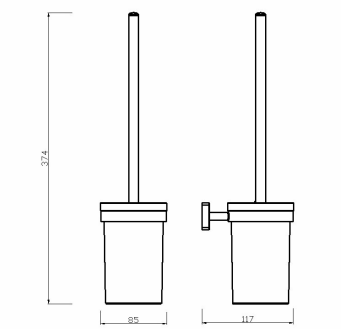

SPECIFICATION

- Height [mm]: 374
- Depth [mm]: 117

FERRO SA
ul. Przemysłowa 7
32-050 Skawina
T: +48 12 25 62 100

NIP 944 20 51 648
KRS 0000289768
REGON 356375388