FDESIGN

COMPANY-SPECIFIC SYMBOL

FD1-LRA-77-66

COLLECTION

LACRIMA

PRODUCT NAME

Wall-mounted shower mixer with spot shower set

COLOUR (FINISH)

old bronze

MAIN PHOTO

PRODUCT FEATURES

- Controlling element: ceramic heads
- Body material/assembly material: brass
- Shower set included: yes
- Spray handle material: brass
- Number of hand shower stream functions: 1
- Material of spray hose: metal braided
- Shower hose length [mm]: 1500
- Type and diameter of connections: connectors G1/2
- Connection spacing [mm]: 150
- Acoustic group: II
- Flow class: A
- Hand shower length [mm]: 200
- Water temperature [°C] max.: 90°C
- Spout type: N/A

TECHNICAL DRAWING

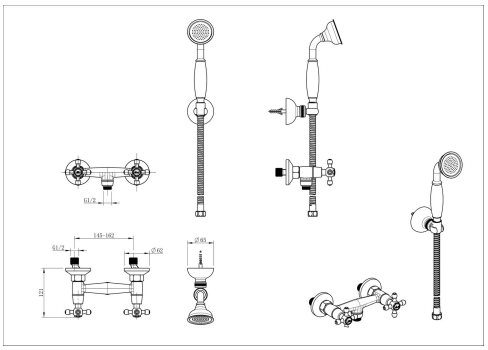

FERRO SA
ul. Przemysłowa 7
32-050 Skawina
T: +48 12 25 62 100

NIP 944 20 51 648
KRS 0000289768
REGON 356375388